PROTECH STEEL
COMMITTED TO EXCELLENCE

METAL ROOFING - SIDING - TRIM

1-3/4" Snap Lock Panel

INSTALLATION MANUAL & USER GUIDE

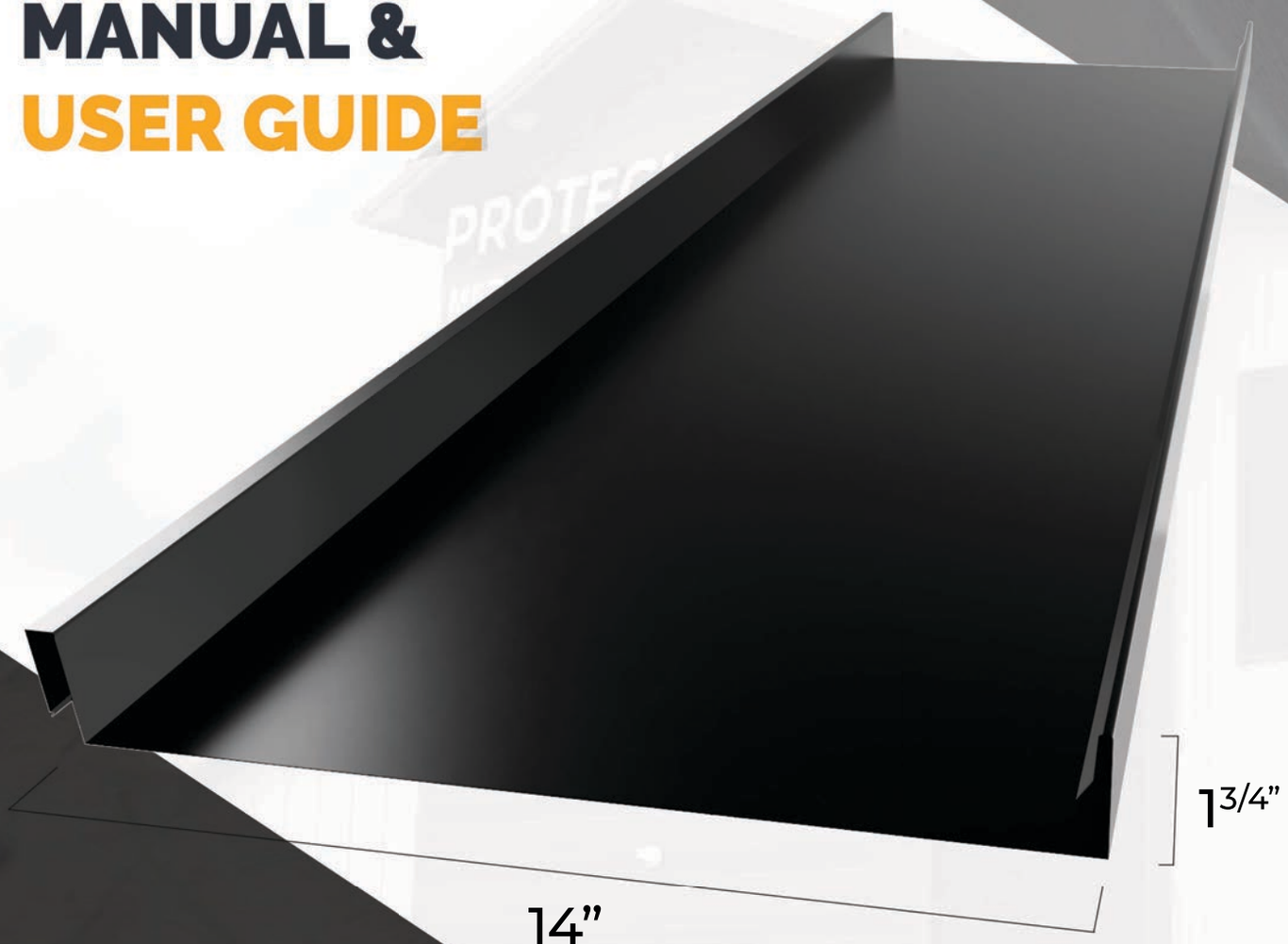

PROTECHSTEEL.COM
1-888-21-STEEL
INFO@PROTECHSTEEL.COM

PROTECH STEEL MATERIAL GUIDELINES

PREPORATION
BEFORE STARTING PANEL INSTALLATION, PLAN THE LAYOUT FOR ALIGNMENT WITH ADJACENT WALL SECTIONS. DECIDE IF THE FIRST PANEL WILL BE A FULL OR PARTIAL PANEL. CONSIDER THE LOCATIONS OF WALL PENETRATIONS, OPENINGS, AND THE EDGES OF THE WALL PLANE TO ENSURE A COHESIVE AND PLANNED APPROACH.

ORDER ACCURACY
UPON RECEIVING MATERIALS, VERIFY THAT ALL PARTS ARE INCLUDED AND UNDAMAGED. REPORT ANY SHORTAGES IMMEDIATELY TO YOUR PROTECH STEEL CONTACT. NOTE ANY TRANSIT DAMAGE ON THE BILL OF LADING TO ENSURE ACCOUNTABILITY AND RESOLUTION.

SAFETY PRECAUTIONS
ENSURE TO USE APPROPRIATE SAFETY GEAR, EQUIPMENT, AND PROCESSES DURING INSTALLATION. ESSENTIAL SAFETY GEAR INCLUDES GLOVES, ARM GUARDS, SAFETY GOGGLES, AND FALL PROTECTION. USE WELL-MAINTAINED TOOLS SUCH AS SCREW GUNS, SAWS, SNIPS, AND FOLDERS. ALWAYS BE AWARE OF POTENTIAL HAZARDS AND TAKE NECESSARY PRECAUTIONS TO AVOID ACCIDENTS.

MATERIAL
NOT ALL PANELS, TRIM, TGAUGES OR LENGTHS ARE AVAILABLE AT EVERY LOCATION. CUSTOM COLORS AND NON-STANDARD MATERIALS ARE SOMETIMES SECURED PER PROJECT AND REQUIRE MINIMUM ORDER QUANTITIES. VERIFY MATERIAL AVAILABILITY WITH YOUR PRO-TECH STEEL REPRESENTATIVE.

MATERIAL STORAGE
STORE MATERIALS INDOORS AWAY FROM THE ELEMENTS IF THEY ARE NOT IMMEDIATELY NEEDED. IF INDOOR STORAGE IS UNAVAILABLE, COVER THE MATERIALS WITH A TARP THAT ALLOWS AIR CIRCULATION. ELEVATE CRATES OFF THE GROUND AND POSITION THEM AT A SLOPE TO ENSURE WATER RUNOFF. READ AND ADHER TO AL LABELS AND CAUTIONS ON PROTECH STEEL MATERIAL.

HANDLING MATERIAL
TRANSPORT PANELS IN THEIR CRATES / STACKS TO THE INSTALLATION SITE. PROVIDE ADEQUATE SUPPORT FOR INDIVIDUAL PANELS EVERY 6 TO 8 FEET. HANDLE PANELS CAREFULLY BY GRASPING ONE SIDE AND ALLOWING THE OTHER SIDE TO HANG DOWN TO PREVENT BENDING OR WARPING.

PRE INSTALLATION INSPECTION
BEFORE INSTALLING PANELS, ENSURE THE WALL SUPPORT STRUCTURE IS PLUMB, SQUARE, AND TRUE. ANY VARIANCE FROM THE PLANE SHOULD NOT EXCEED 1/4" OVER 10 FEET. PROPER ALIGNMENT ENSURES A SEAMLESS AND PROFESSIONAL INSTALLATION. PROPPER PLANNING CAN SAVE TIME AND TROUBLE DOWN THE ROAD.

PROPER DRY-IN
COVER THE BUILDING ENVELOPE SHEATHING WITH A MOISTURE BARRIER LIKE PROTECH STEEL SYNTHETIC UNDERLAYMENT OR PEEL AND STICK BUILDING WRAP TO RESIST AIR AND WATER PENETRATION. INSTALL THE MOISTURE BARRIER HORIZONTALLY, STARTING FROM THE BOTTOM AND OVERLAPPING EACH LAYER ABOVE THE PREVIOUS ONE TO ENSURE PROPER WATER SHEDDING.

FASTENERS
AVOID OVER-TIGHTENING FASTENERS, WHICH CAN DEFORM PANELS AND TRIM. FASTENERS SHOULD SECURE THE MATERIAL JUST ENOUGH TO MAKE FIRM CONTACT BETWEEN THE SUPPORT STRUCTURE, PANEL, AND TRIM. FOLLOW THE RECOMMENDED FASTENING PATTERNS AND DETERMINE FASTENER SPACING BASED ON A LOAD ANALYSIS TO ENSURE SECURE ATTACHMENT.

INSTALLATION PROTOCOL
FOR HORIZONTAL PANEL INSTALLATIONS, BEGIN AT THE BOTTOM AND WORK UPWARDS, ENSURING EACH PANEL OVERLAPS THE ONE BELOW TO ALLOW WATER RUNOFF. ENSURE ALL SURFACES HAVE AN ADEQUATE SLOPE TO PREVENT WATER ACCUMULATION. VERTICAL PANELS CAN BE INSTALLED FROM RIGHT-TO-LEFT OR LEFT-TO-RIGHT. REGULARLY CHECK FOR PROPER MODULE COVERAGE TO MAIN-TAIN ALIGNMENT.

PLASTIC WRAP
PANELS AND TRIM ARE OFTEN PROVIDED WITH A PLASTIC FILM TO PROTECT AGAINST MINOR DAMAGE DURING FABRICATION, TRANSIT, AND HANDLING. REMOVE THE FILM JUST BEFORE INSTALLATION. DELAYING REMOVAL UNTIL AFTER INSTALLATION OR PROLONGED EX-POSURE TO SUNLIGHT OR HEAT CAN MAKE THE FILM DIFFICULT TO REMOVE.

FOLLOWING THESE GUIDELINES ENSURES A SMOOTH INSTALLATION PROCESS AND MAINTAINS THE INTEGRITY AND APPEARANCE OF YOUR PROTECH STEEL PANELS.

PROTECH STEEL GUIDE OVERVIEW

THE DRAWINGS AND ILLUSTRATIONS IN THIS MANUAL ARE PROVIDED FOR REFERENCE PURPOSES ONLY AND MAY NOT BE SUITABLE FOR ALL BUILDING DESIGNS OR PRODUCT INSTALLATIONS. ALL PROJECTS MUST COMPLY WITH THE SPECIFIC BUILDING CODES APPLICABLE TO THEIR LOCATION. IT IS ESSENTIAL TO ADHERE TO ALL RELEVANT BUILDING REGULATIONS AND INDUSTRY BEST PRACTICES.

PROTECH STEEL WILL NOT BE HELD ACCOUNTABLE FOR THE PERFORMANCE OF THE WALL SYSTEM IF IT IS NOT INSTALLED IN ACCORDANCE WITH THE RECOMMENDATIONS IN THIS MANUAL. IN INSTANCES WHERE THERE IS A DISCREPANCY BETWEEN THIS MANUAL AND THE ACTUAL ERECTION DRAWINGS, THE ERECTION DRAWINGS SHOULD TAKE PRECEDENCE. ALL COLORS MUST BE CHOSEN FROM STEEL SMAPLES AND NOT PRINT OR ONLINE.

BEFORE ORDERING AND INSTALLING MATERIALS, ENSURE THAT ALL DIMENSIONS ARE CONFIRMED WITH FIELD MEASUREMENTS TO ENSURE ACCURACY.

PROTECH STEEL RESERVES THE RIGHT TO AMEND ANY DETAILS, RECOMMENDATIONS, OR SUGGESTIONS WITHOUT PRIOR NOTICE. IF YOU HAVE ANY QUESTIONS REGARDING THE SUCCESSFUL INSTALLATION OF THESE WALL PANEL SYSTEMS, PLEASE CONTACT YOUR LOCAL PROTECH STEEL REPRESENTATIVE. PRIOR STEEL KNOWLEDGE REQUIRED FOR PROPER INSTALLATION.

OIL CANNING, WHICH IS THE VISIBLE WAVINESS IN THE FLAT AREAS OF METAL PANELS, IS NOT CONSIDERED A DEFECT. IT IS A NATURAL CHARACTERISTIC OF LIGHT GAUGE COLD-FORMED METAL PRODUCTS, ESPECIALLY THOSE WITH BROAD, FLAT SURFACES. VARIOUS FACTORS CAN CONTRIBUTE TO OIL CANNING THAT ARE BEYOND THE CONTROL OF PROTECH STEEL, INCLUDING:: MISALIGNMENT OF THE SUPPORT SYSTEM, OVER-DRIVING FASTENERS, STRESS WITHIN OR INDUCED INTO THE PANEL, THERMAL EXPANSION AND CONTRACTION, IMPROPER MATERIAL HANDLING, PANEL WIDTH, GAUGE, LENGTH, AND COLOR. SPEAK WITH ONE OF OUR PROJECT PROFESSIONALS ABOUT OILCANNING AND WAYS TO AVOID IT.

FOR ANY ADDITIONAL INFORMATION NOT COVERED IN THIS MANUAL, CONSULT YOUR LOCAL PROTECH STEEL BRANCH. THIS MANUAL IS INTENDED FOR INDUSTRY PROFESSIONALS, TO SERVE AS A GUIDE FOR SUCCESSFULLY INSTALLING A WALL PANEL SYSTEM. IT IS THE RESPONSIBILITY OF THE PROFESSIONAL OR COMPETENT INSTALLER TO ENSURE THE SAFE AND PROPER INSTALLATION OF THE PRODUCT.

*FOR MORE INFORMATION OR QUESTIONS REGARDING THE INSTALLATION OF WALL PANEL SYSTEMS, CONTACT YOUR LOCAL PROTECH STEEL REPRESENTATIVE AT **1-888-21-STEEL** OR **INFO@PROTECHSTEEL.COM.***

PROTECH STEEL
COMMITTED TO EXCELLENCE
METAL ROOFING - SIDING - TRIM

1-3/4" SNAP LOCK

GENERAL DATA SHEET

14" PANEL COVERAGE

1-3/4" RIB HEIGHT

CLIP SYSTEM

CONCEALED FASTENER

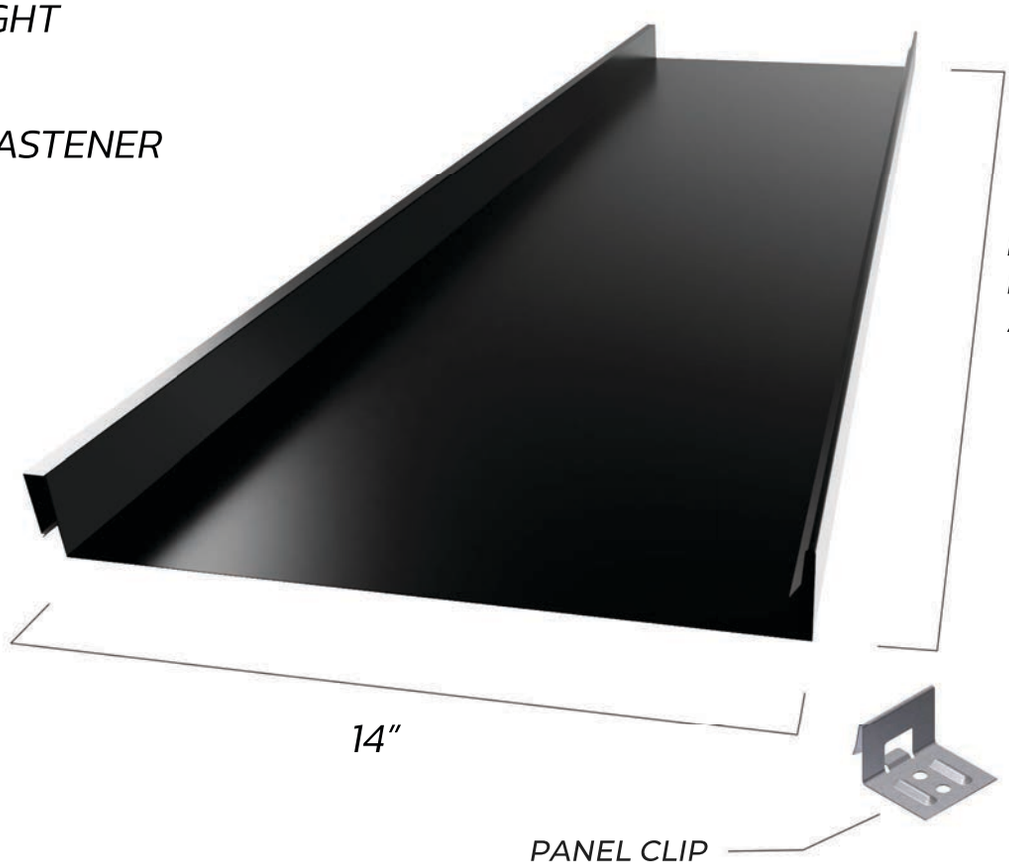

FOR USE AS ROOFING / SIDING PANEL

**26G, 24G PVDF/KYNAR FINISH*

**ALTERNATE MATERIALS/FINISH AVAIALABLE*

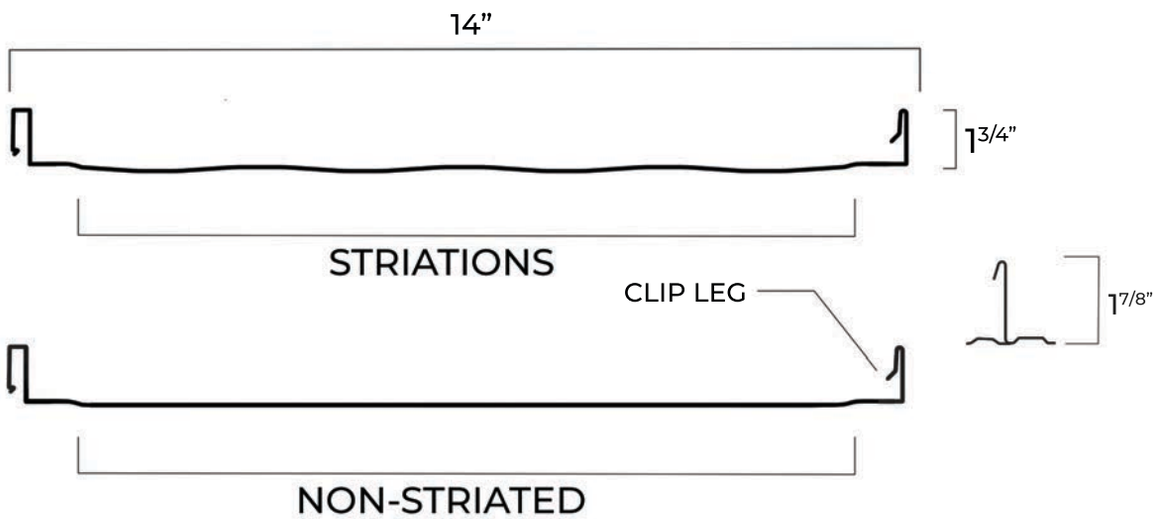

1-3/4” SNAP LOCK

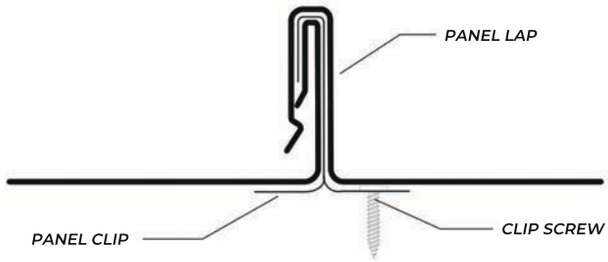

PANEL INFORMATION



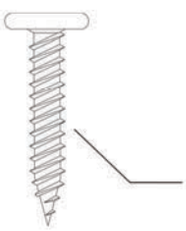

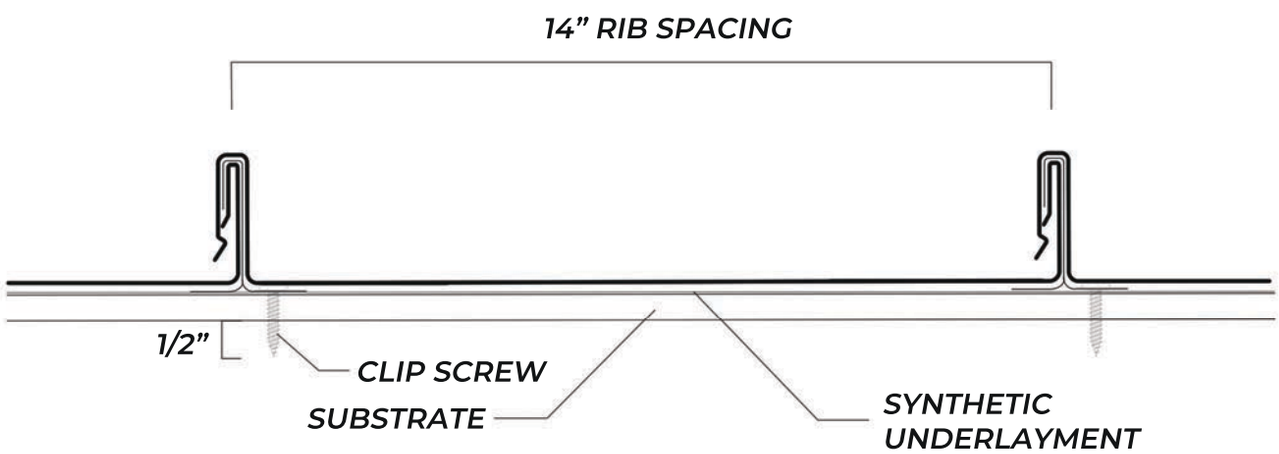

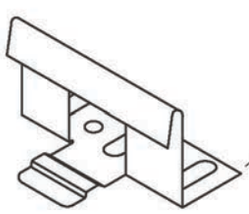

UL - CLASS 90 CLIP
REQUIRES TWO FASTENERS

1-3/4” SNAP LOCK

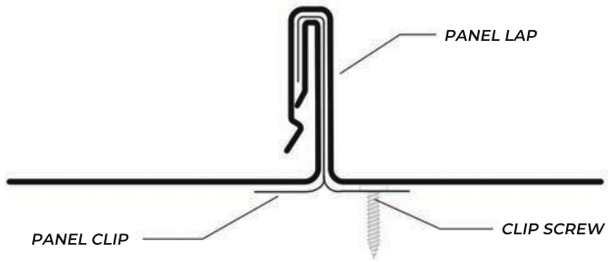

PANEL CLIP INFORMATION

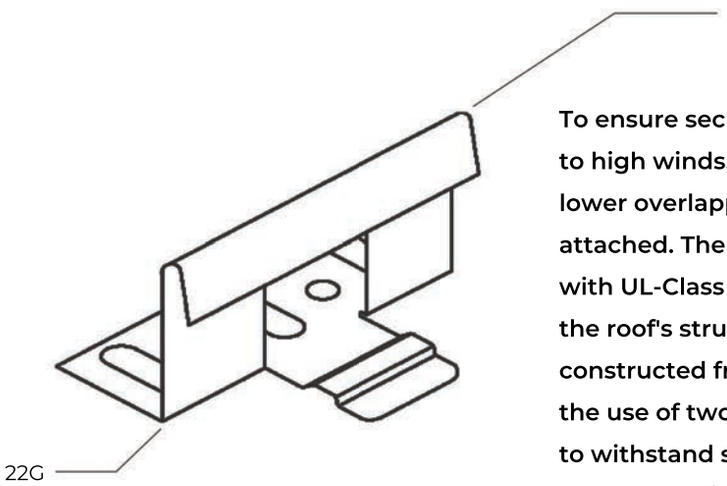

To ensure secure panel installation, especially in regions prone to high winds, clips are strategically positioned along the lower overlapping rib of each panel before the next panel is attached. The specific placement of these clips, in accordance with UL-Class 90 wind uplift standards, is critical to maintain the roof's structural integrity. We utilize a UL-rated SG17822 clip, constructed from a minimum of 22-gauge steel, which mandates the use of two fasteners per clip. This clip system is designed to withstand significant wind forces, providing a reliable and durable roofing solution.

UL-CLASS 90 TESTING DATA

APPLICATION	INSTALLATION SPECS	CLIP SPACING	FASTENER TYPE	# REQUIRED
CLIPS ON PURLINS (MIN. 16 GAUGE)	UL-90 24 GAUGE	4'-0" O.C.	#10 x 1" Pancake Head Driller – 2 Fasteners	2
	UL-90 22 GAUGE	4'-0" O.C.	#10 x 1" Pancake Head Driller – 2 Fasteners	2
	UL-90 22 GAUGE	5'-0" O.C.***	#10 x 1" Pancake Head Driller – 2 Fasteners	2
CLIPS ON 5/8" WOOD DECK	UL-90 24 GAUGE	4'-0" O.C.	#10 x 1" Pancake Head Wood – 2 Fasteners	2
	UL-90 22 GAUGE	4'-0" O.C.	#10 x 1" Pancake Head Wood – 2 Fasteners	2
CLIPS ON RIGID INSULATION / METAL DECK	UL-90 24 GAUGE	4'-0" O.C.	#14-13 Deck Screws* – 2 Fasteners	2
	UL-90 22 GAUGE	4'-0" O.C.	#14-13 Deck Screws* – 2 Fasteners	2

for more info on this panel’s testing scan this qr code

TABLE OF CONTENTS

EAVE TRIIM — 1
GABLE TRIM — 2
RIDGE TRIM DETAIL — 3
SIDEWALL TRIM — 4
ENDWALL TRIM — 5
VALLEY TRIM — 6

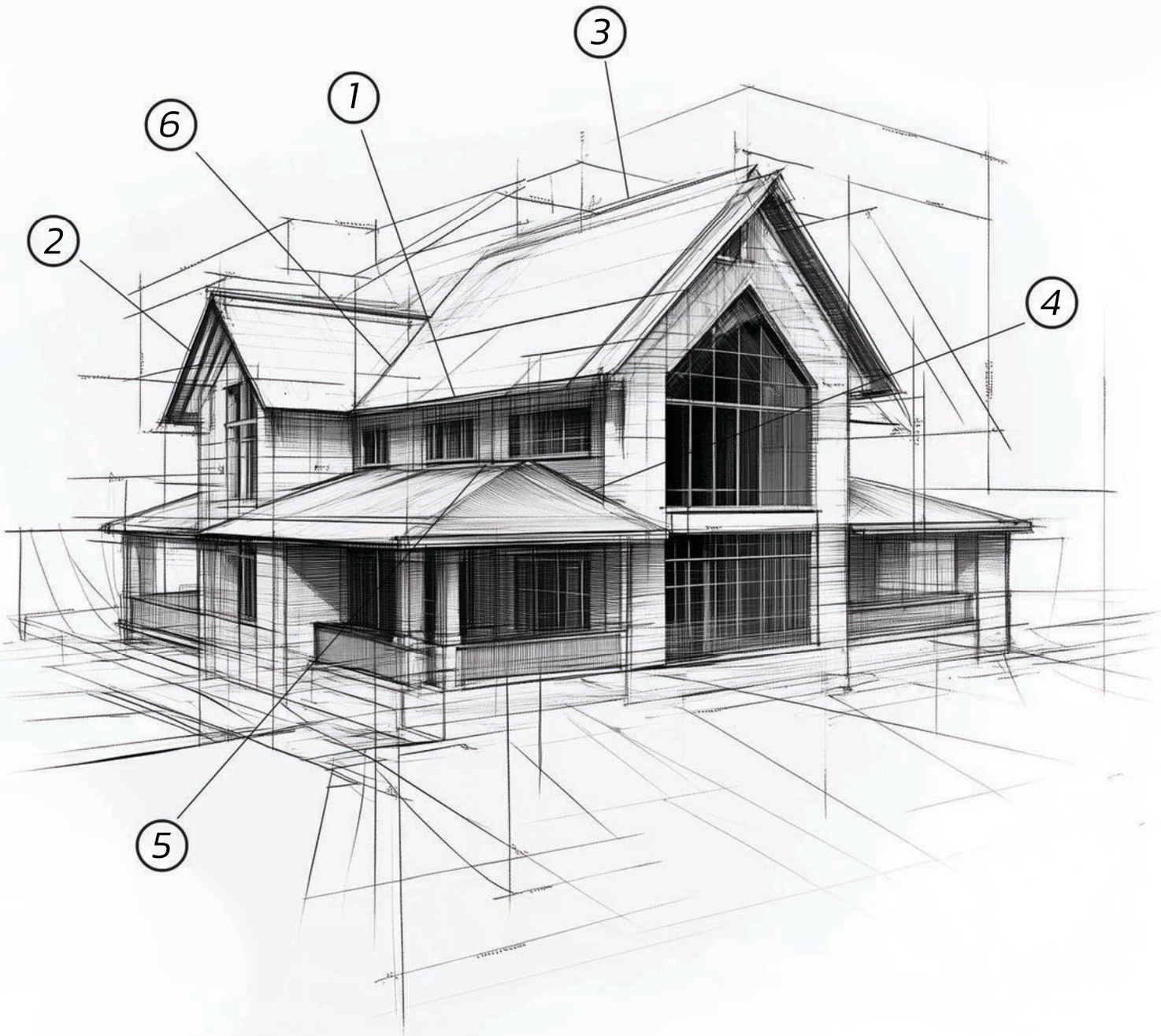

Eave Trim Detail

NOTE:
MIN. 4" LAP ON ALL FLASHING.
APPROVED SEALANT IN ALL
FLASHING LAPS.

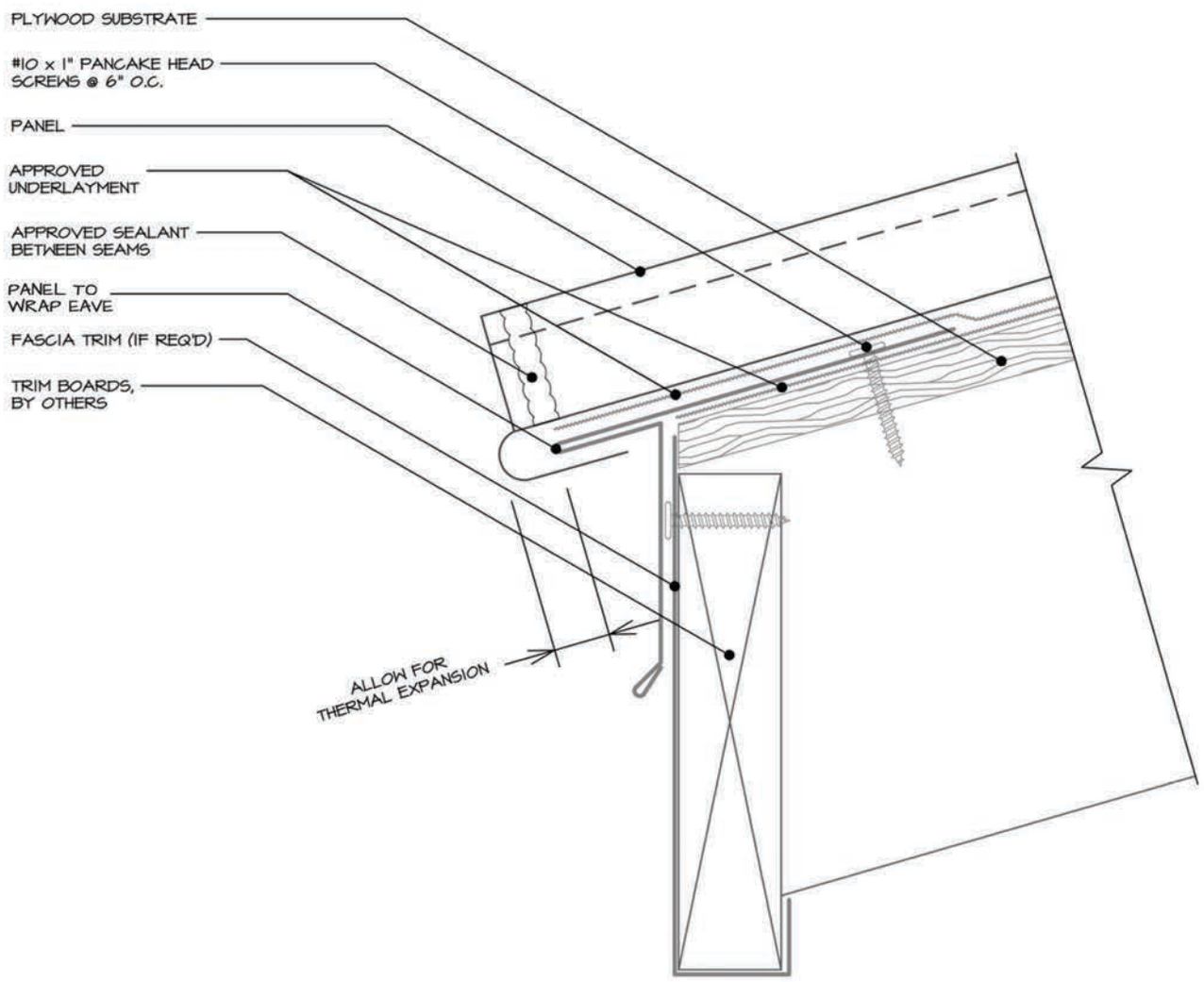

In a simple eave trim detail, the panel edge is hemmed over a Style D trim. This creates a clean, finished edge, effectively directing water runoff away from the building's fascia without the inclusion of a gutter system.

Gutter Eave Trim Detail

NOTE:
MIN. 4" LAP ON ALL FLASHING.
APPROVED SEALANT IN ALL FLASHING LAPS.

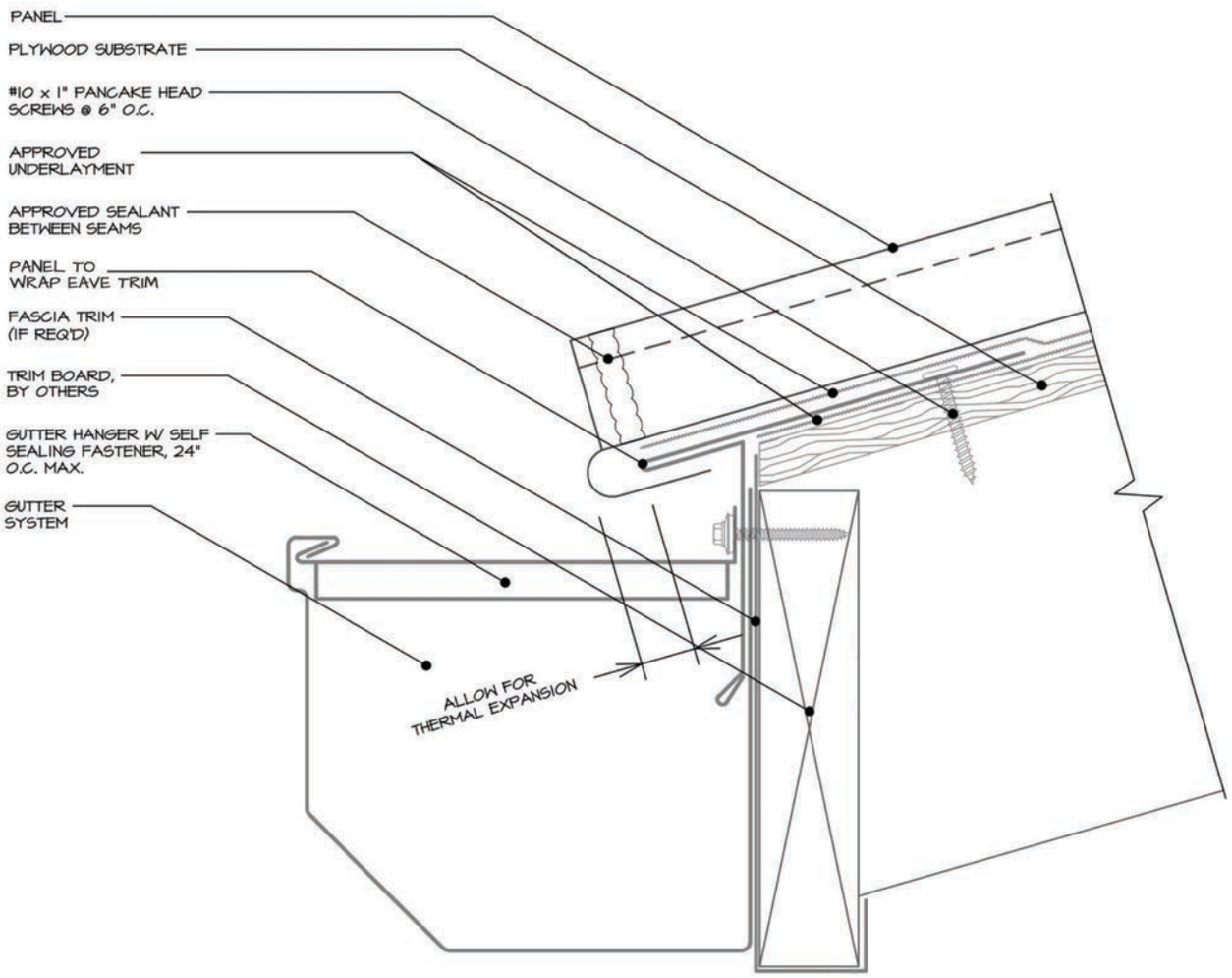

For an eave trim and gutter detail, the panel's edge is hemmed over a Style D trim. A gutter is then positioned directly beneath the Style D. Fasteners and clips penetrate through the panel, Style D, and gutter, securing the entire assembly and ensuring proper water drainage.

Gable Trim Detail

NOTE:
MIN. 4" LAP ON ALL FLASHING.
APPROVED SEALANT IN ALL FLASHING LAPS.

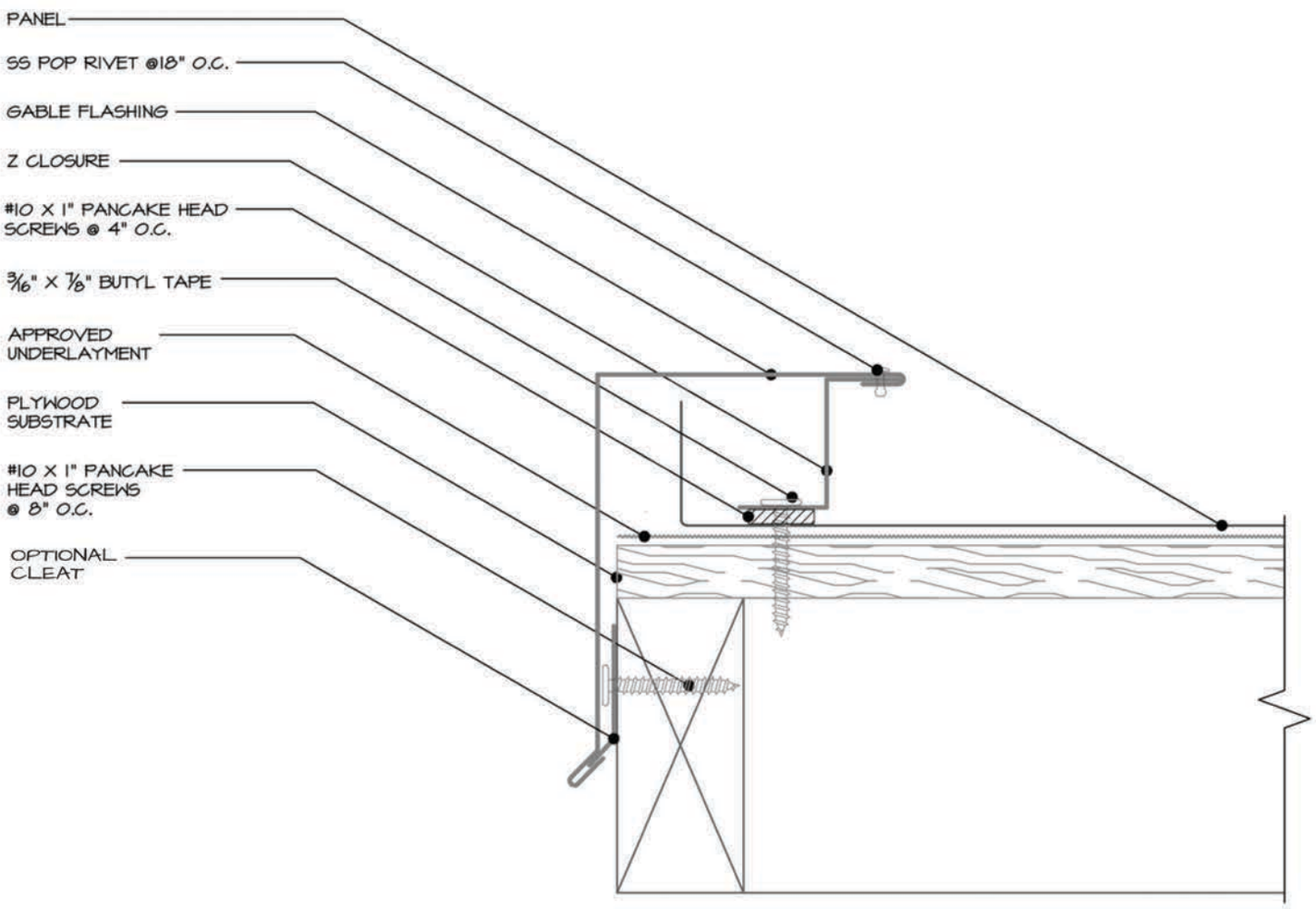

A standard gable trim detail uses Z-flashing with the panel bent upward underneath, creating a barrier against water infiltration. This setup allows for proper drainage while maintaining a secure, watertight seal, preventing wind-driven rain from penetrating the roof edge.

Prow Gable Trim Detail

NOTE:
MIN. 4" LAP ON ALL FLASHING.
APPROVED SEALANT IN ALL FLASHING LAPS.

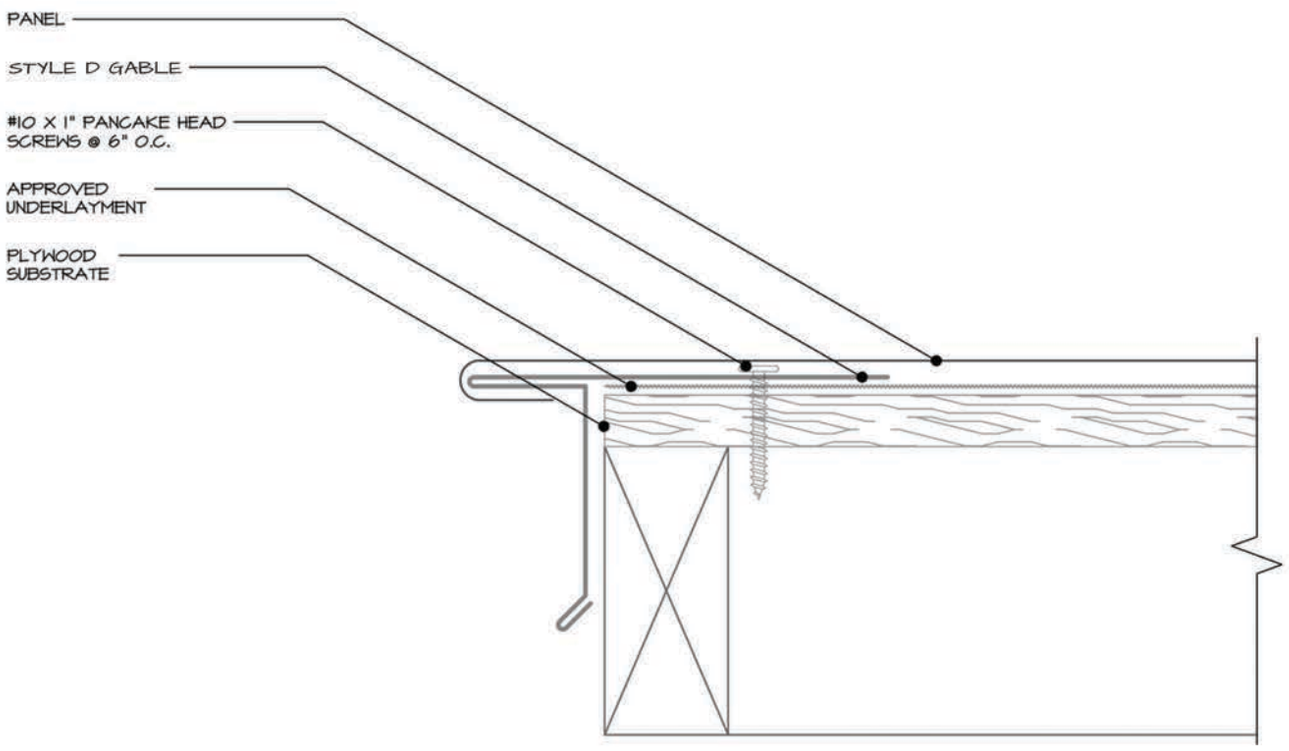

A prow gable allows a metal panel to be hemmed over a Style D drip edge, securing the edge while accommodating thermal expansion and contraction. This design reduces stress on fasteners and prevents distortion, all while maintaining a tight, weather-resistant seal to effectively shed water and protect the structure.

Ridge Cap Trim Detail

NOTE:
MIN. 4" LAP ON ALL FLASHING.
APPROVED SEALANT IN ALL FLASHING LAPS.

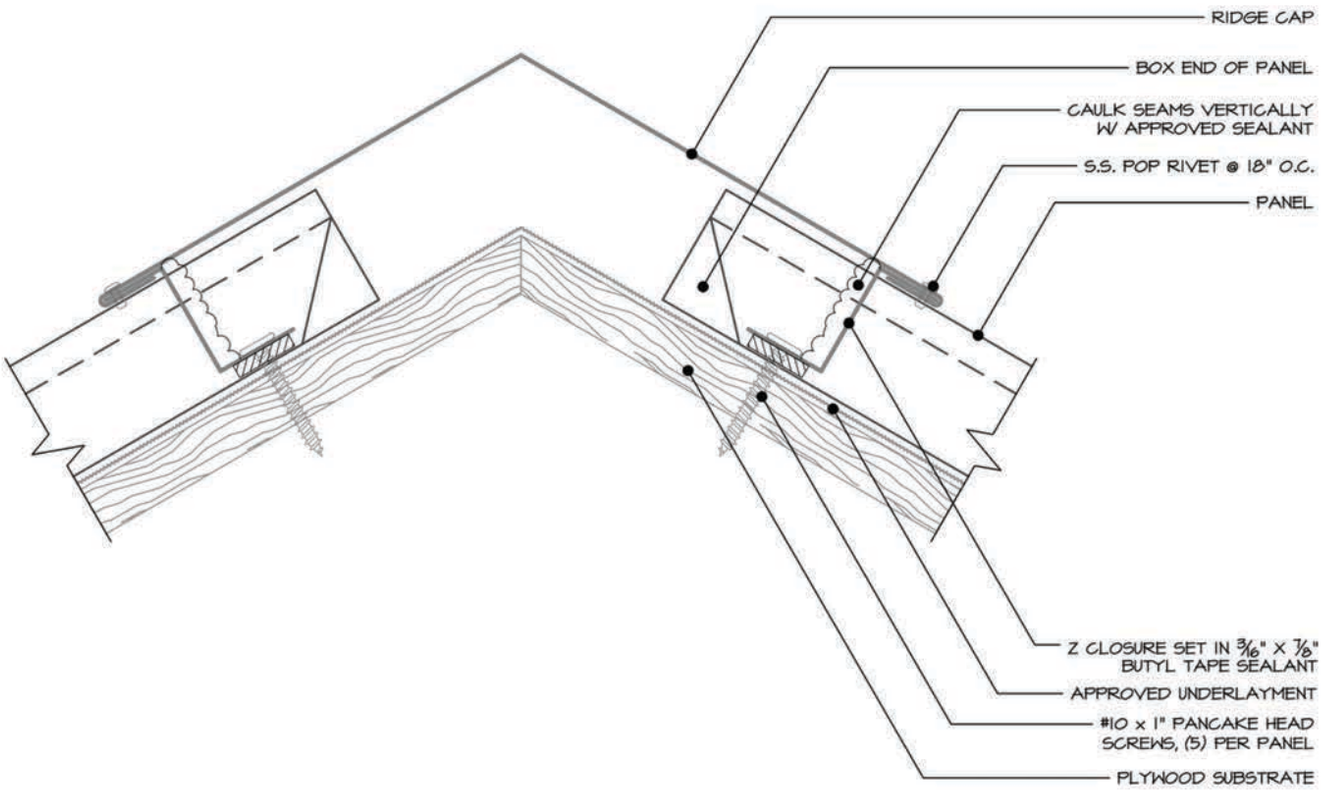

A ridge cap trim detail is designed to hug the Z-trim, creating a tight seal while being riveted in place for a secure connection. This ensures proper water shedding and structural integrity at the roof peak. For vented ridge applications, the Z-trim can be replaced with Snap-Z ventilated Z-closures, allowing for airflow while maintaining weather resistance.

Side Wall Trim Detail

NOTE:
MIN. 4" LAP ON ALL FLASHING.
APPROVED SEALANT IN ALL FLASHING LAPS.

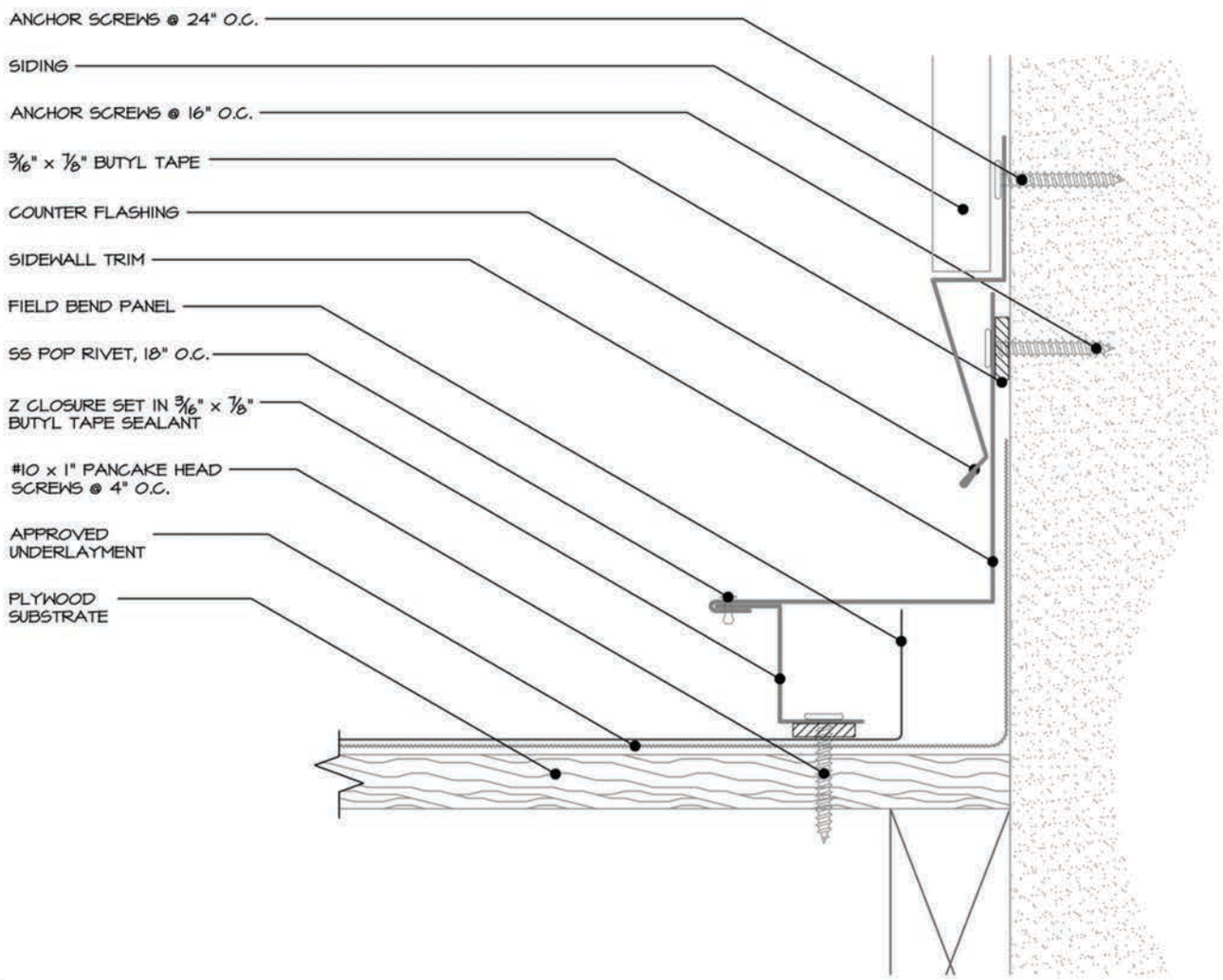

A sidewall trim detail employs a base flashing, crucial for preventing moisture intrusion. The base flashing is installed above the sidewall trim and extends beneath the wall panels, creating a barrier. This design effectively diverts water away from potential penetration points along the sidewall flashing, ensuring a dry and secure building envelope.

End Wall Trim Detail

NOTE:
MIN. 4" LAP ON ALL FLASHING.
APPROVED SEALANT IN ALL FLASHING LAPS.

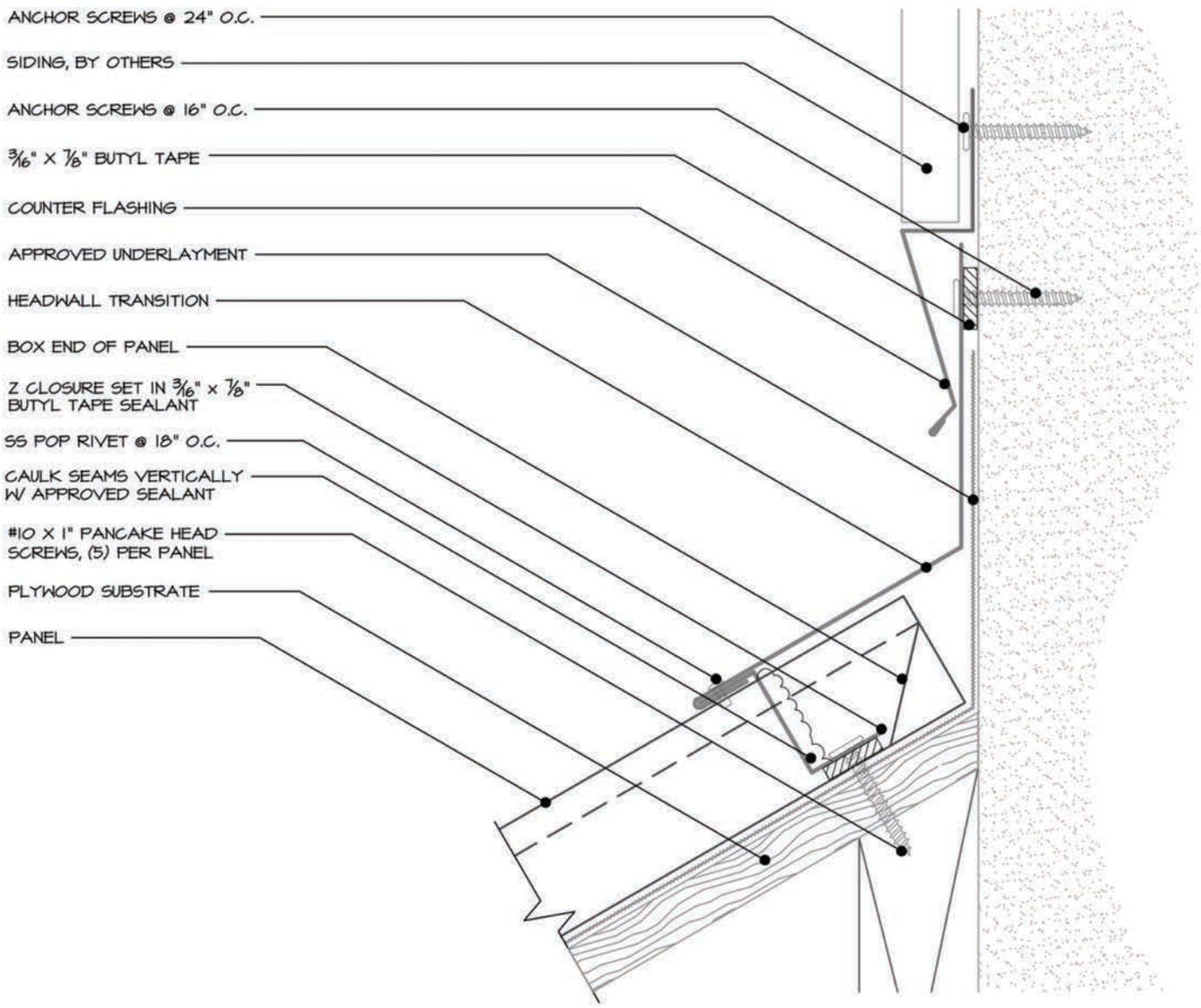

At an end wall, where panels terminate against a wall at the slope's peak, an end wall flashing is used. Crucially, a counter flashing acts as a base trim, sliding beneath the siding panels. This creates a barrier, similar to a sidewall flashing, preventing water intrusion at the panel's termination point.

Valley Trim Detail

NOTE:
MIN. 4" LAP ON ALL FLASHING.
APPROVED SEALANT IN ALL
FLASHING LAPS.

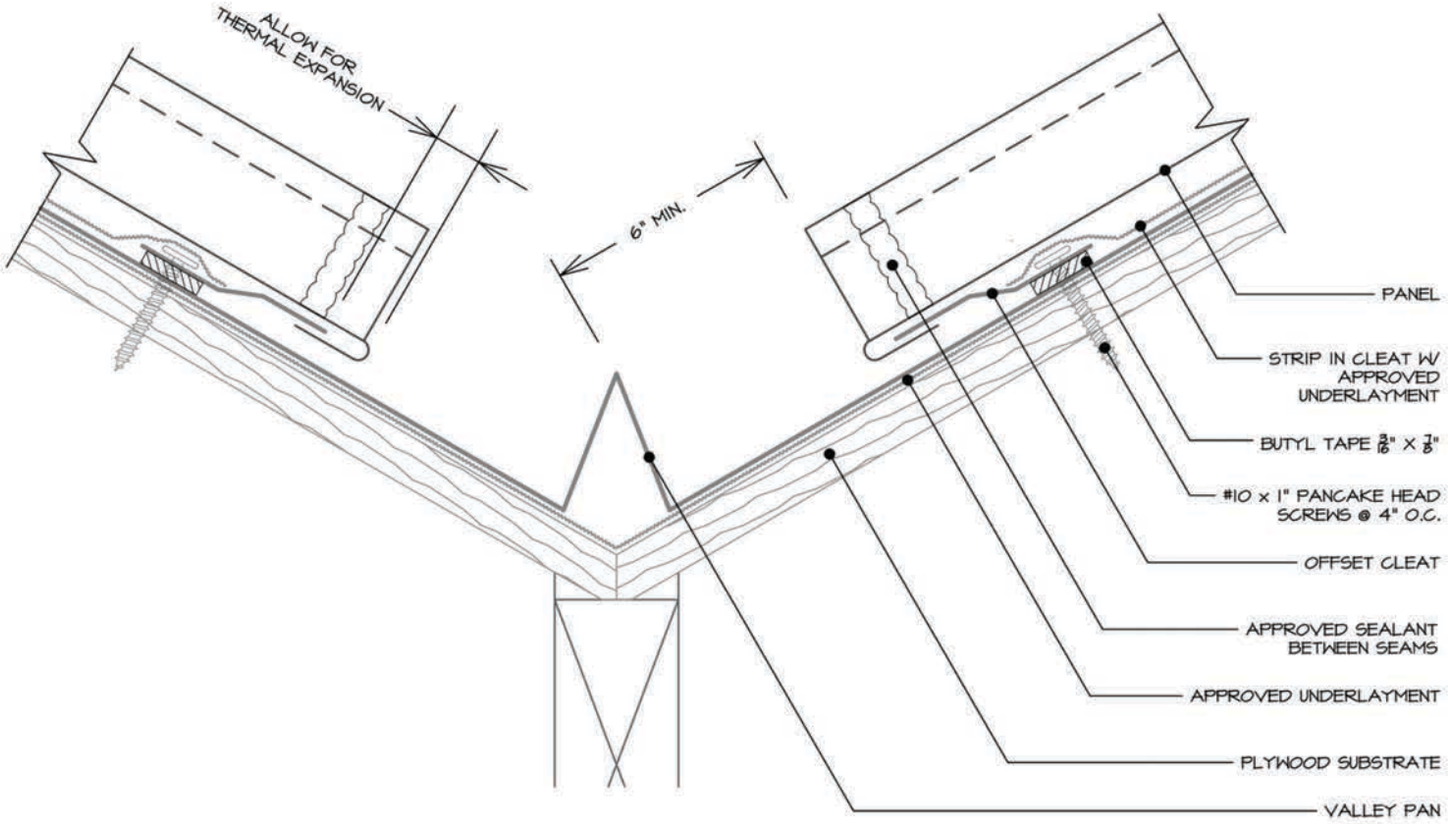

In a valley trim detail, panels converging into a valley are protected by a combination of components. An offset cleat, secured 6" up the valley with butyl tape, provides a base. Panels are hemmed over these cleats, ensuring robust water diversion and a watertight valley intersection.